TECAPRES®

Ø50mm
1000daN

TPSP 1000.1

VDI SAFETY

PED 2014/68/UE · ISO POWER

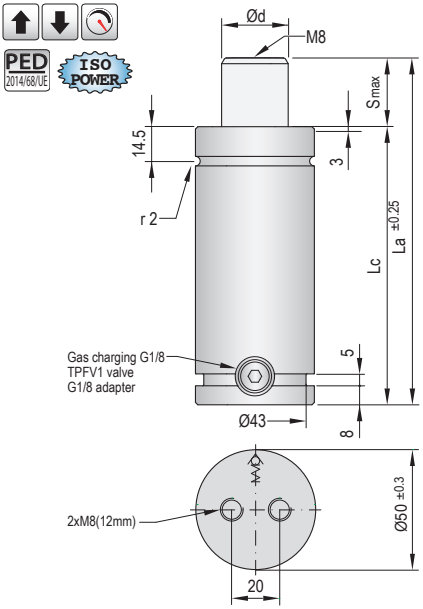

Pressure medium	Nitrogen (N_2)
Max. charging pressure	150 Bar
Min. charging pressure	35 Bar
Rod seal area	Ø28 - 6,16 cm² Ø30 - 7,07 cm²
Operating temperature	0ºC - 80ºC
Force increase by temperature	0,33 %/ºC
Max. stem speed	1,2 m/s
Maintenance kit	Ø28 - Kit SP1000.1/28 Ø30 - Kit SP1000.1/30

VDI 3003 · ISO TI901

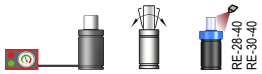

Maximum strokes / minute (at 20ºC)

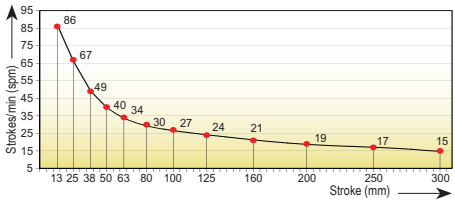

Code	Smax mm	La mm	Lc mm	Ød mm	Fa daN	90% F daN	100% Fc daN	P Bar	V l	Kg
TPSP 1000x13.1	13	120,4	107,7	28		1120	1145		0,040	1,25
TPSP 1000x25.1	25	145	120	28		1220	1260		0,057	1,40
TPSP 1000x38.1	38	171	133	28		1270	1325		0,077	1,45
TPSP 1000x50.1	50	195	145	28	920 ±5%	1300	1360		0,096	1,57
TPSP 1000x63.1	63	222	159	28	(20ºC)	1320	1390		0,116	1,75
TPSP 1000x80.1	80	255	175	28		1340	1415	150	0,142	1,87
TPSP 1000x100.1	100	295	195	28		1360	1435	(20ºC)	0,173	1,90
TPSP 1000x125.1	125	345	220	28		1375	1450		0,211	2,25
TPSP 1000x160.1	160	415	255	30		1940	2140		0,224	2,35
TPSP 1000x200.1	200	495	295	30	1060 ±5%	1975	2185		0,275	2,50
TPSP 1000x250.1	250	595	345	30	(20ºC)	2005	2225		0,337	3,25
TPSP 1000x300.1	300	695	395	30		2025	2255		0,400	3,95

Force/stroke ratio

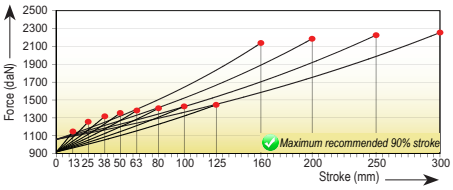

Initial force/charging pressure ratio

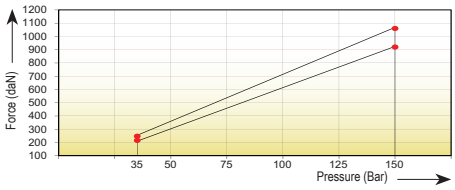

Assembly possibilities

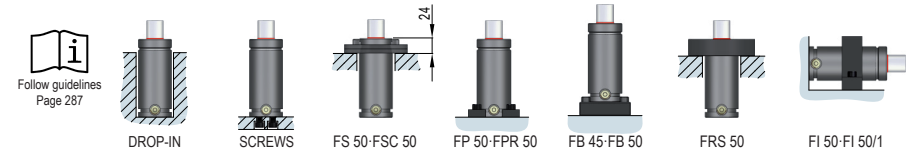

Follow guidelines Page 287

DROP-IN · SCREWS · FS 50·FSC 50 · FP 50·FPR 50 · FB 45·FB 50 · FRS 50 · FI 50·FI 50/1